Nero

Zen SS316L Basin Mixer Handless

Finish & SKU

Brushed Bronze
NR162201bBZ

Graphite
NR162201bGR

Brushed Gold
NR162201bBG

Brushed Nickel
NR162201bBN

Specifications

Watermark License
WM-060073

Temperature Rating
Min 1°C-Max 75°C

Pressure Rating
Min 150kpa-Max 500kpa

Warranty

WATER RATING
www.waterrating.gov.au
4.5 litres per minute
Licence No. 1225

Lead Free

Features

- 25mm ceramic disc cartridge can be adjusted to control water temperature and flow control settings, saving energy
- Solid 316L stainless steel construction for longevity
- NEOPERL laminar aerator with slim stream flow director
- Polyamide PEX flexible hoses-1/2BSP female
- Suitable for mains pressure installation

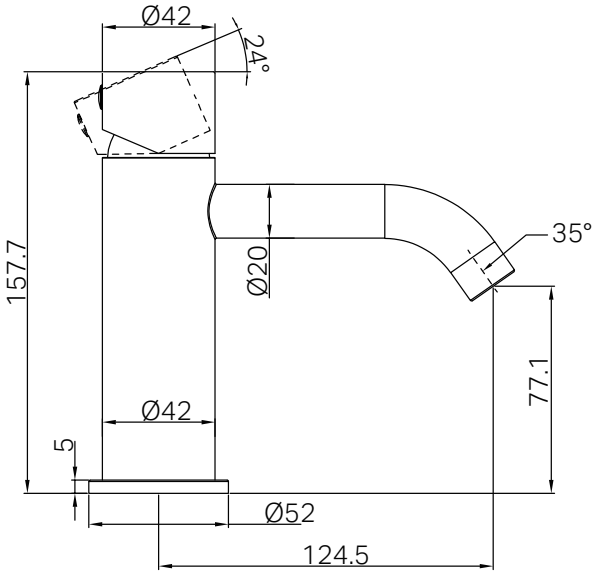

Maintenance And Care

- Regularly check the mixer and connections for signs of wear or leaks.
- Clean the tap with mild soapy water to maintain its appearance, avoiding harsh chemicals and abrasive materials that may damage the finish.

- Dimensions are nominal measurements only.